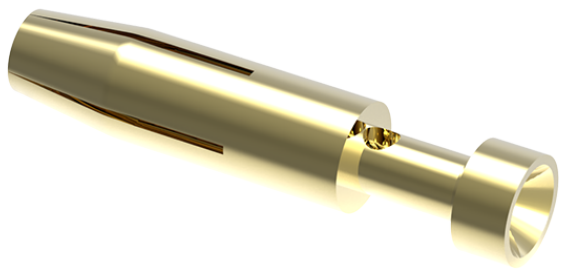

Product Type: Heavy-duty connector pins

Product Name:SCGF-016-0.75

Product Description: 16A gold plated,Female,compatible with 0.75mm ^{2}

Product Size

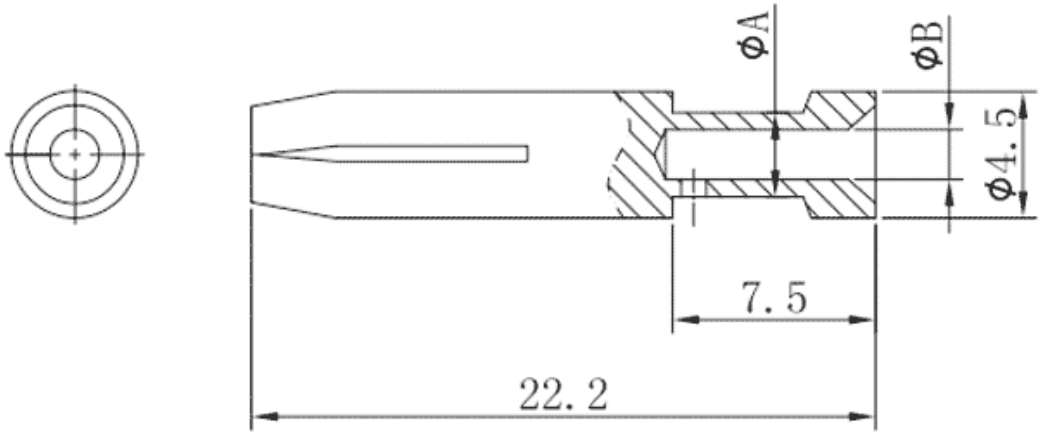

Parameters

SUPU ID	SCGF-016-0.75
Operating temperature range	-40°C～+125°C
Category	cold-pressed pin female terminal
Connection method	Crimp terminal

Mechanical endurance	≥500

Technical data

IEC Rated Current	16A
Contact/surface material	Hard-gold Plated
Pin Material	Copper Alloy
Contact resistance	≤1mΩ
Wire Specification	0.75mm^2/18AWG

Commercial data

Order No	SCGF-016-0.75
Packing unit	PCS
Minimum order quantity	1

Ningbo SUPU Electronics Co., Ltd.

Address: No. 150, Xinxing 4th Road, High-tech Industrial Development Zone,

Cixi City, Zhejiang Province, China

Zip code: 315303

Switchboard: +86 574-63288158

Fax: +86 574-63288170

E-mail:supucontact@supu.cn

Service Hotline: 400-626-6336

Wechat

The right to modify data belongs to SUPU.