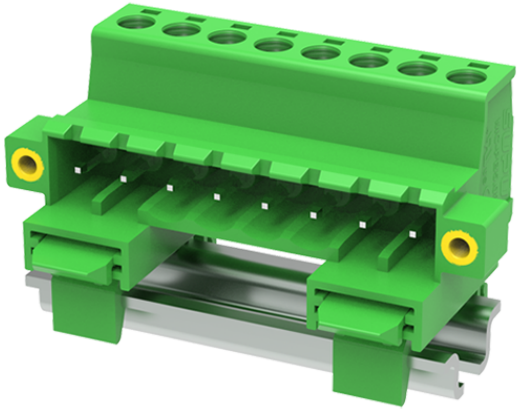

Product Type: Plug-in terminal-Socket

Product Name:MC-PB5.08H22C-SF-0001

Product Description: Pitch: 5.08mm Rated Voltage：320V Rated Current: 12A Connection method：Screw connection colour：customizable

Product Size

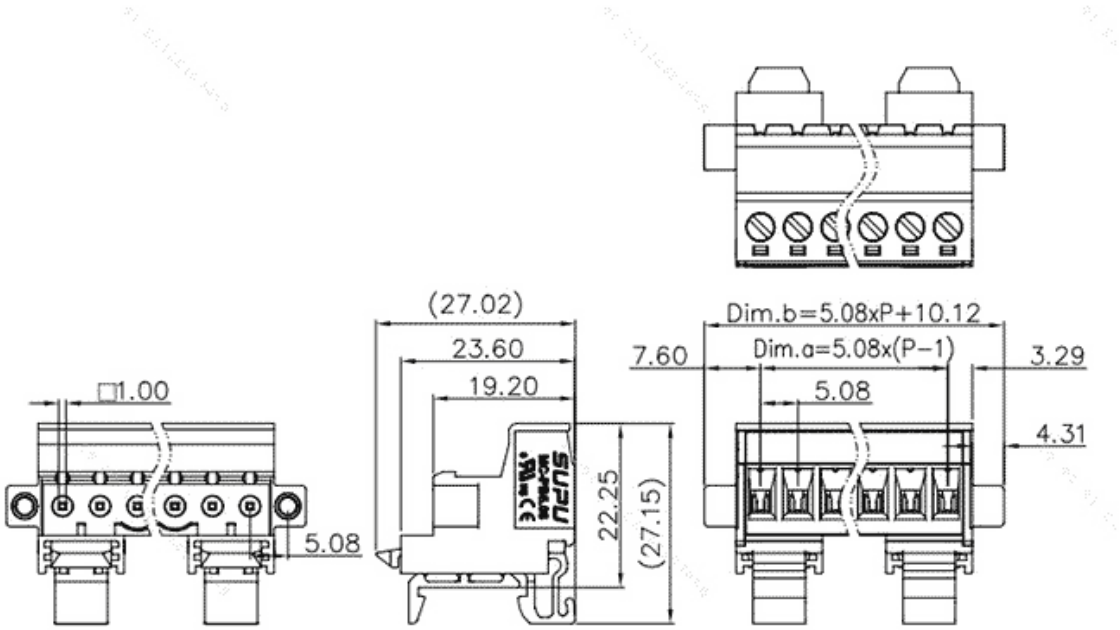

Parameters

SUPU ID	MC-PB5.08H22C-SF-0001
Pitch	5.08
Number of connections	22
Connection method	Screw connection

Protection Level	IP20
Operating temperature range	-40~+105°C
Insulation material	PA66
Insulation material group	I
Contact material	Copper alloy
Contact plating	Sn,Plated
Color	Green/Black/Blue/Grey/Orange/Red

Technical data

IEC Rated Current	320V
IEC Rated Voltage	12A
Overvoltage category	III III II
Degree of pollution	3 2 2
Rated impulse voltage	4.0KV 4.0KV 4.0KV
UL Rated Current	10A - 10A
UL Rated Voltage	300V - 300V
Conductor cross section rigid	0.2-2.5mm²
Conductor cross section flexible	0.2-2.5mm²
Conductor cross section flexible,with furrule	0.2-2.5mm²
Locking screw Specification	M3
Locking screw torque	0.5N.m
Fixed Screw Specification	-
Stripping length	7-8mm
Use group	B/C/D

Commercial data

Order No	MC-PB5.08H22C-SF-0001

Ningbo SUPU Electronics Co., Ltd.

Address: No. 150, Xinxing 4th Road, High-tech Industrial Development Zone,
Cixi City, Zhejiang Province, China

Zip code: 315303

Switchboard: +86 574-63288158

Fax: +86 574-63288170

E-mail:supucontact@supu.cn

Service Hotline: 400-626-6336

Wechat

The right to modify data belongs to SUPU.